60+ SINCE 1961

ENGLISH

SLABS
LINEAR

Made in Italy

PILOSIO
SCAFFOLDING & FORMWORKS

LINEAR

It is a semi-traditional system for the execution of slabs cast in place with high capacity props which support a primary and secondary frame of wood beams with protected heads.It is ideal for cast slabs in monolithic reinforced or lightened concrete and also for traditional slabs with thick beams.
The counter casting surface, usually made by the company, can consist of "yellow" or blacks panels or various types of plywood 21 or 27 mm thick depending on the architectural requirements and degree of finishing required.

The **LINEAR** formwork system consists of a few elements:
Props of various openings and capacities in accordance with **EN 1065**
PL 20 wooden beams 330, 390, 490, 590 cm long protected at the head ends
4-way head
Intermediate head
Drop head
30 cm plate for lowered beams and super elevation
25 cm angle bar for slab lateral infilling

LINEAR FORMWORKS WITH 4-WAY HEAD

It is the most economic solution for the execution of slabs with any geometries. The 4-way head allows carrying out primary frames with one or two **PL20** beams to optimize the number of props necessary.

LINEAR FORMWORKS WITH DROP HEAD

The use of the drop head significantly reduces the amount of material needed to reinforce the slabs. Once the casting has been carried out, after the minimum period of consolidation which mainly depends on the thickness of the slab, type of concrete and external temperature it is possible to proceed with the recovery of tripods and intermediate props. Then, simple hammer blow it is possible to release the fork from the drop head, which lowers itself allowing recovering the primary and secondary **PL20** beams and part of the boards. The props with drop head remain reinforced until the complete consolidation of concrete. The recovered components can be reused to reinforce a second slab by using a second set of props. For the reinforcement of a third slab it is possible to use the props of the first slab because the complete consolidation of the first slab allows replacing the props with others of poor performance.

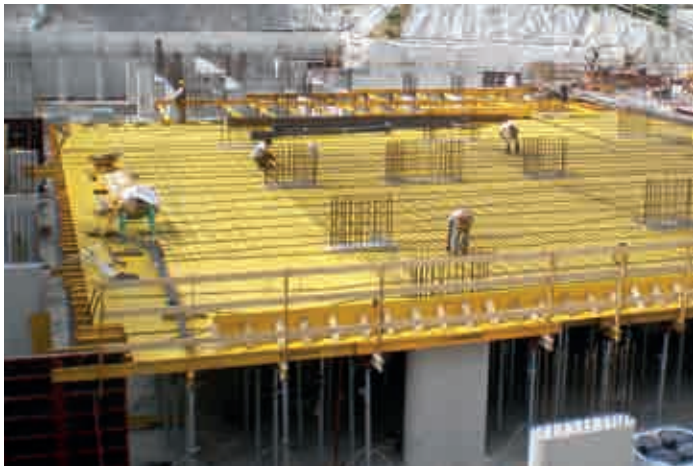

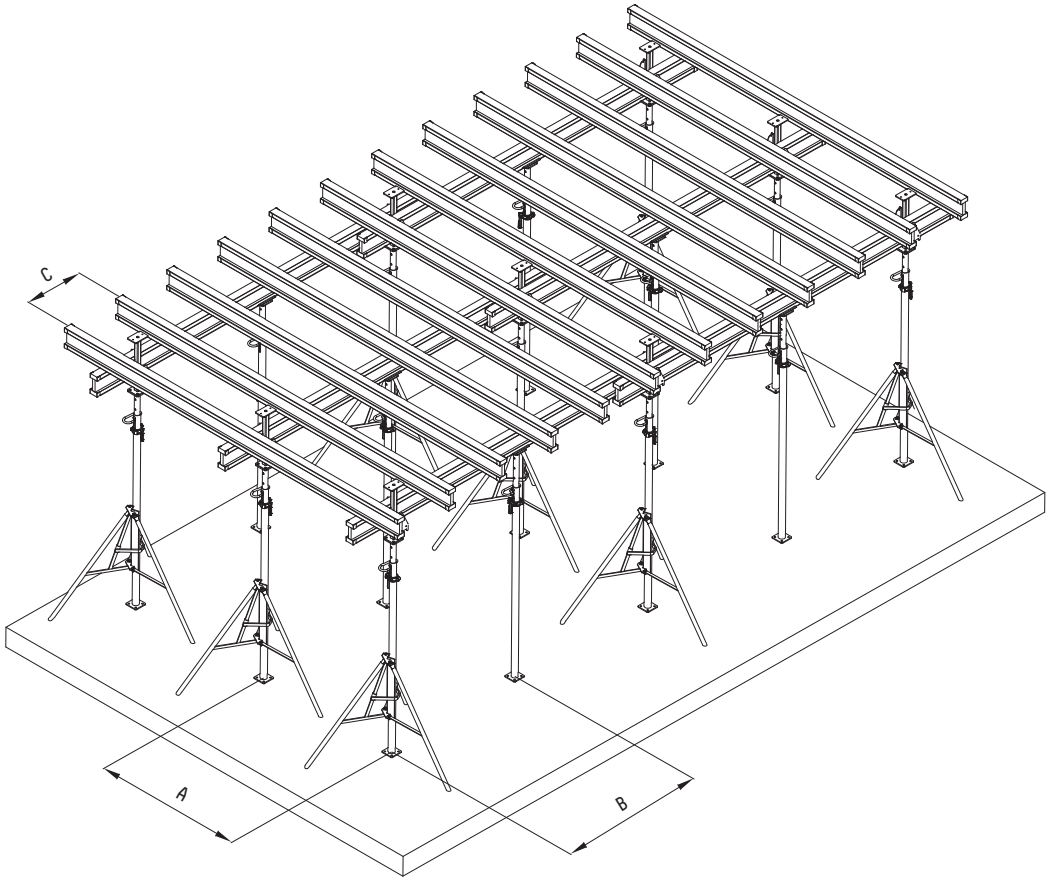

ACCESSORIES FOR LOWERED BEAMS

Special plates and infilling angle bars are available to quickly reinforce, even without specialized labor, lowered beams and edge beams up to 60 cm. The 25 cm angle bar for infilling slabs is the safest, quickest and most economical solution for the lateral stopper casting.

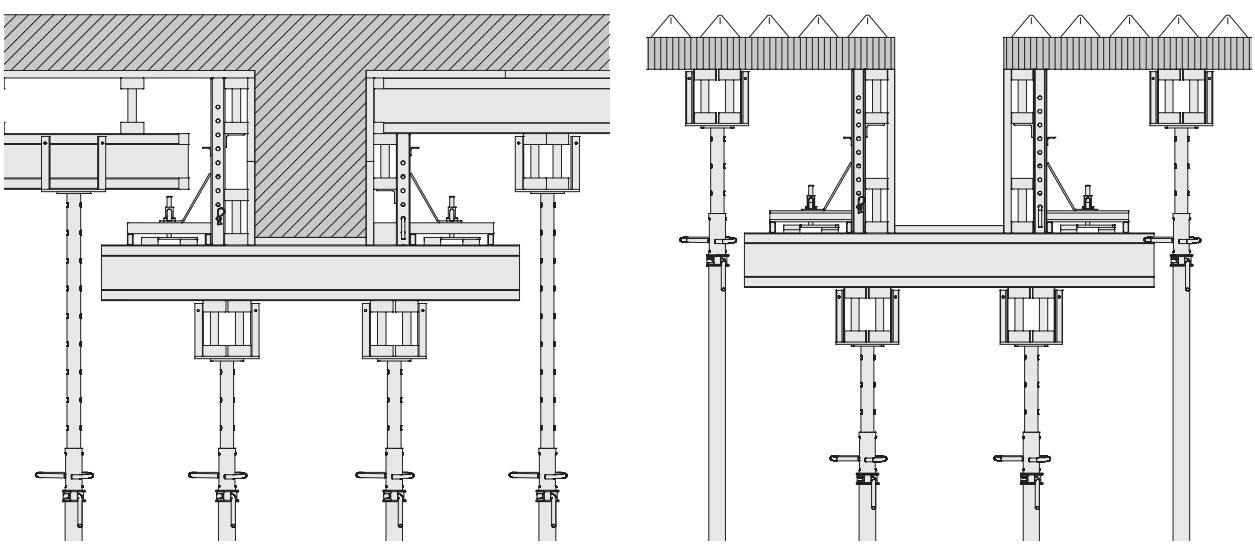

Example of reinforced lowered beam.

TABLE OF THE MAIN BEAM DISTANCE AND PROPS DEPENDING ON THE SLAB THICKNESS															
Floor thickness s (cm)	Weight +overload P (kN/m²)	Secondary framework distance beam C (m)			Primary beam framework A (m)										
		0,40	**0,50**	0,75	1,00	1,25	1,50	1,75	2,00	2,25	**2,50**	3,00	3,50	4,00	4,50
		Allowable opening A Max (m)			Allowable opening B (m)										
10	4,0	3,54	3,28	2,87	3,16	2,83	2,58	2,39	2,24	2,11	2,00	1,67	1,43	1,25	1,11
12	4,5	3,40	3,16	2,76	2,98	2,67	2,43	2,25	2,11	1,98	1,78	1,48	1,27	1,11	0,99
14	5,0	3,28	3,05	2,66	2,83	2,53	2,31	2,14	2,00	1,78	1,60	1,33	1,14	1,00	0,89
16	5,5	3,18	2,95	2,58	2,70	2,41	2,20	2,04	1,82	1,62	1,45	1,21	1,04	0,91	0,81
18	6,0	3,09	2,87	2,51	2,58	2,31	2,11	1,90	1,67	1,48	1,33	1,11	0,95	0,83	0,74
20	6,5	3,01	2,79	2,44	2,48	2,22	2,03	1,76	1,54	1,37	1,23	1,03	0,88	0,77	0,68
22	7,0	2,94	2,73	2,38	2,39	2,14	1,90	1,63	1,43	1,27	1,14	0,95	0,82	0,71	0,63
24	7,5	2,87	**2,66**	2,33	2,31	2,07	1,78	1,52	1,33	1,19	**1,07**	0,89	0,76	0,67	0,59
26	8,0	2,81	2,61	2,28	2,24	2,00	1,67	1,43	1,25	1,11	1,00	0,83	0,71	0,63	0,56
28	8,5	2,75	2,55	2,23	2,17	1,88	1,57	1,34	1,18	1,05	0,94	0,78	0,67	0,59	0,52
30	9,0	2,70	2,51	2,19	2,11	1,78	1,48	1,27	1,11	0,99	0,89	0,74	0,63	0,56	0,49
35	10,25	2,59	2,40	2,10	1,95	1,56	1,30	1,11	0,98	0,87	0,78	0,65	0,56	0,49	0,43
40	11,50	2,49	2,31	2,02	1,74	1,39	1,16	0,99	0,87	0,77	0,70	0,58	0,50	0,43	0,39
45	12,75	2,40	2,23	1,95	1,57	1,25	1,05	0,90	0,78	0,70	0,63	0,52	0,45	0,39	0,35
50	14,00	2,33	2,16	1,89	1,43	1,14	0,95	0,82	0,71	0,63	0,57	0,48	0,41	0,36	0,32
60	16,50	2,21	2,05	1,78	1,21	0,97	0,81	0,69	0,61	0,54	0,48	0,40	0,35	0,30	0,27
70	19,00	2,10	1,95	1,54	1,05	0,84	0,70	0,60	0,53	0,47	0,42	0,35	0,30	0,26	0,23
80	21,50	2,02	1,87	1,36	0,93	0,74	0,62	0,53	0,47	0,41	0,37	0,31	0,27	0,23	0,21
90	24,00	1,95	1,81	1,22	0,83	0,67	0,56	0,48	0,42	0,37	0,33	0,28	0,24	0,21	0,19
100	26,50	1,88	1,66	1,11	0,75	0,60	0,50	0,43	0,38	0,34	0,30	0,25	0,22	0,19	0,17

The following values are calculated:
- *P= weight of the concrete x slab thickness + overload = 25 (kN/m³) x s (m) + 1,5 (kN/m²)*
- *deformation F < L/500*
- *bending moments < 5 kNm*
- *cutting actions < 11 kN*
- *PxAxB < 20 kN (shore load)*
- *example: slab s= 24 cm - p= 7,5k N/m² - C= 0,5 m ---> A max= 2,66 m ---> A= 2,50 m ---> B= 1,07 m*